FAIRCHILD SEMICONDUCTOR®

August 2009

FAN2110 — TinyBuck™
3-24V Input, 10A, High-Efficiency, Integrated Synchronous Buck Regulator

Features

- Wide Input Voltage Range: 3V-24V
- Wide Output Voltage Range: 0.8V to 80% V_{IN}
- 10A Output Current
- 1% Reference Accuracy Over Temperature
- Over 93% Peak Efficiency
- Programmable Frequency Operation: 200KHz to 600KHz
- Fully Synchronous Operation with Integrated Schottky Diode on Low-Side MOSFET Boosts Efficiency
- Internal Bootstrap Diode
- Power-Good Signal
- Starts up on Pre-Bias Outputs
- Accepts Ceramic Capacitors on Output
- External Compensation for Flexible Design
- Programmable Current Limit
- Under-Voltage, Over-Voltage, and Thermal Shutdown Protections
- Internal Soft-Start
- 5x6mm, 25-Pin, 3-Pad MLP Package

Applications

- Servers & Telecom
- Graphics Cards & Displays
- Computing Systems
- Point-of-Load Regulation
- Set-Top Boxes & Game Consoles

Description

The FAN2110 TinyBuck™ is a highly efficient, small footprint, constant frequency, 10A integrated synchronous Buck regulator.

The FAN2110 contains both synchronous MOSFETs and a controller/driver with optimized interconnects in one package, which enables designers to solve high-current requirements in a small area with minimal external components. Integration helps to minimize critical inductances making component layout simpler and more efficient compared to discrete solutions.

The FAN2110 provides for external loop compensation, programmable switching frequency, and current limit. These features allow design flexibility and optimization. High frequency operation allows for all ceramic solutions.

The summing current mode modulator uses lossless current sensing for current feedback and over-current protection. Voltage feedforward helps operation over a wide input voltage range.

Fairchild's advanced BiCMOS power process, combined with low-$R_{DS(ON)}$ internal MOSFETs and a thermally efficient MLP package, provide the ability to dissipate high power in a small package.

Output over-voltage, under-voltage, and thermal shutdown protections help protect the device from damage during fault conditions. FAN2110 also prevents pre-biased output discharge during startup in point-of-load applications.

Related Application Notes

AN-8022 — TinyCalc™ Calculator

Ordering Information

Part Number	Operating Temperature Range	Package	Eco Status	Packing Method
FAN2110MPX	-10°C to 85°C	Molded Leadless Package (MLP) 5x6mm	Green	Tape and Reel
FAN2110EMPX	-40°C to 85°C	Molded Leadless Package (MLP) 5x6mm	Green	Tape and Reel

For Fairchild's definition of Eco Status, please visit: http://www.fairchildsemi.com/company/green/rohs_green.html.

Typical Application

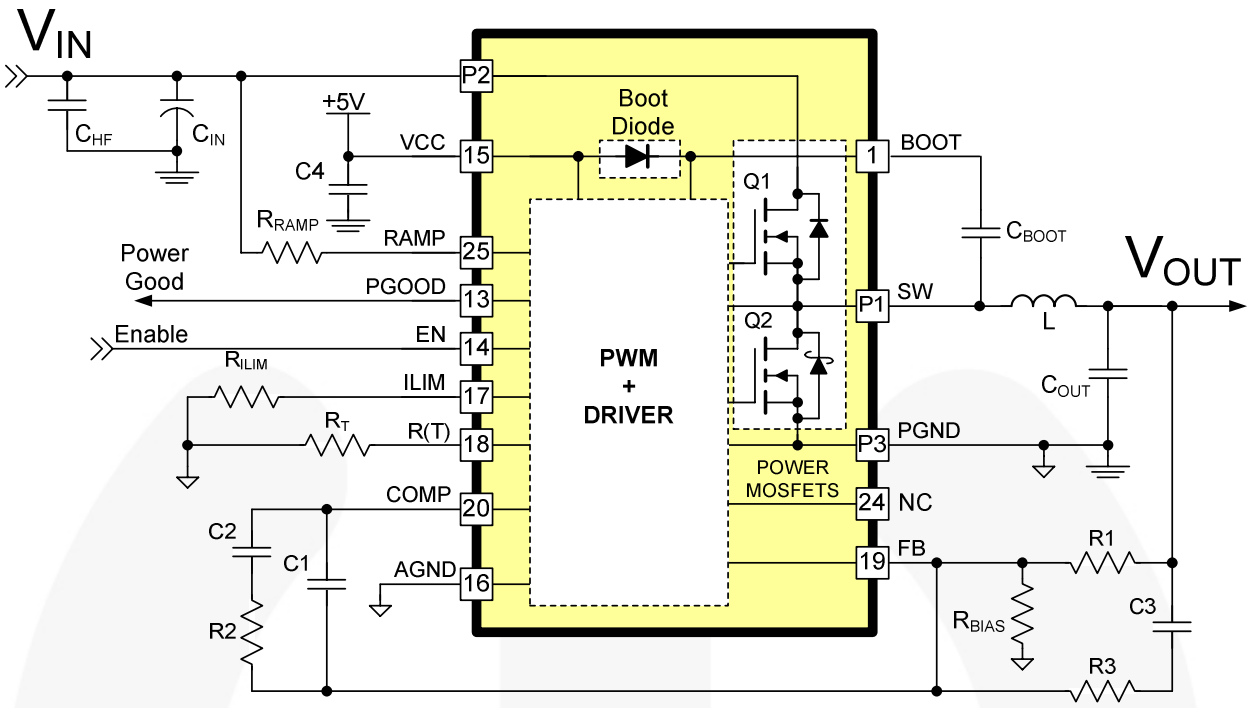

Figure 1. Typical Application Diagram

Block Diagram

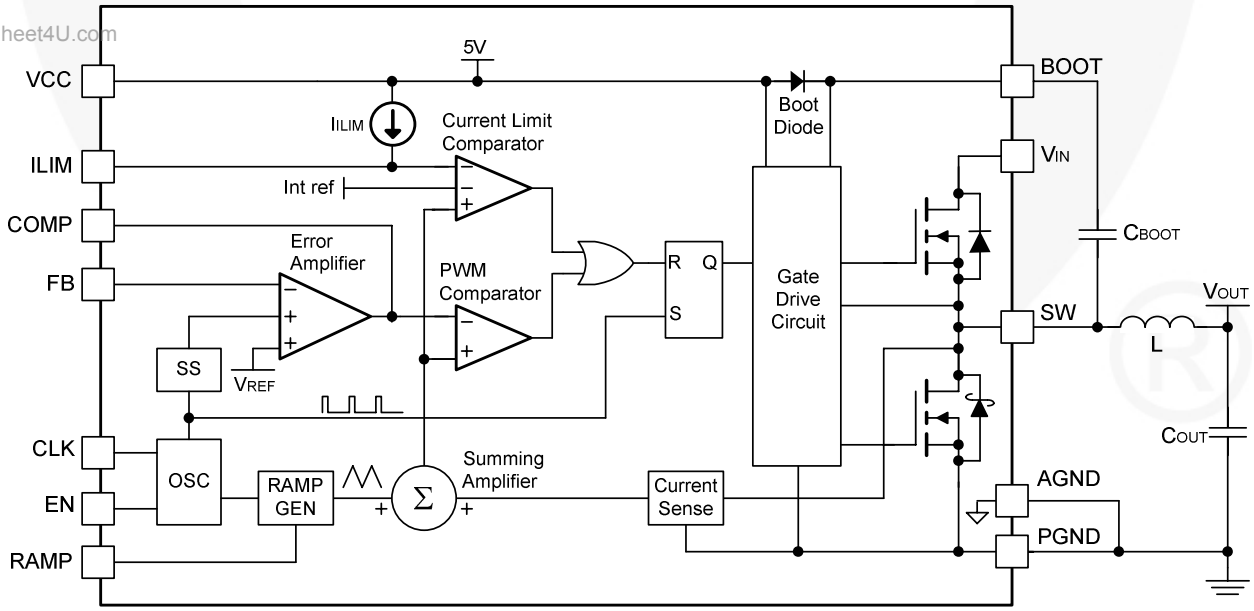

Figure 2. Block Diagram

Pin Configuration

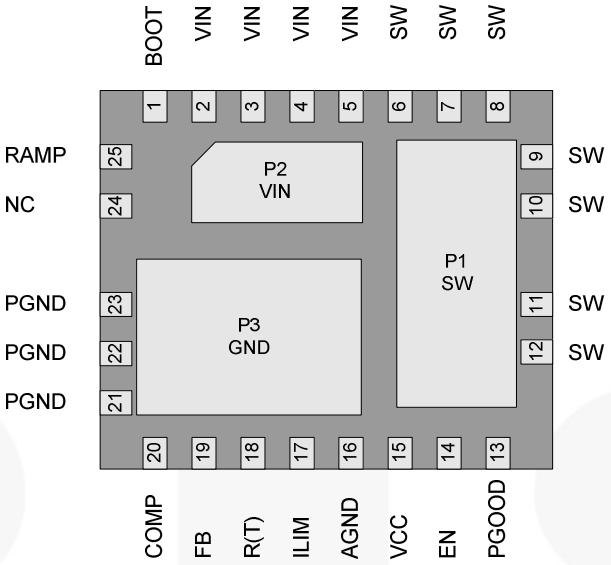

Figure 3. MLP 5x6mm Pin Configuration (Bottom View)

Pin Definitions

Pin #	Name	Description
P1, 6-12	SW	**Switching Node**. Junction of high-side and low-side MOSFETs.
P2, 2-5	VIN	**Power Conversion Input Voltage**. Connect to the main input power source.
P3, 21-23	PGND	**Power Ground**. Power return and Q2 source.
1	BOOT	**High-Side Drive BOOT Voltage**. Connect through capacitor (C_{BOOT}) to SW. The IC includes an internal synchronous bootstrap diode to recharge the capacitor on this pin to V_{CC} when SW is LOW.
13	PGOOD	**Power-Good Flag**. An open-drain output that pulls LOW when FB is outside the limits specified in electrical specs. PGOOD does not assert HIGH until the fault latch is enabled.
14	EN	**ENABLE**. Enables operation when pulled to logic HIGH or left open. Toggling EN resets the regulator after a latched fault condition. This input has an internal pull-up when the IC is functioning normally. When a latched fault occurs, EN is discharged by a current sink.
15	VCC	**Input Bias Supply for IC**. The IC's logic and analog circuitry are powered from this pin. This pin should be decoupled to AGND through a > 2.2µF X5R / X7R capacitor.
16	AGND	**Analog Ground**. The signal ground for the IC. All internal control voltages are referred to this pin. Tie this pin to the ground island/plane through the lowest impedance connection.
17	ILIM	**Current Limit**. A resistor (R_{ILIM}) from this pin to AGND can be used to program the current-limit trip threshold lower than the internal default setting.
18	R(T)	**Oscillator Frequency**. A resistor (R_T) from this pin to AGND sets the PWM switching frequency.
19	FB	**Output Voltage Feedback**. Connect through a resistor divider to the output voltage.
20	COMP	**Compensation**. Error amplifier output. Connect the external compensation network between this pin and FB.
24	NC	**No Connect**. This pin is not used.
25	RAMP	**Ramp Amplitude**. A resistor (R_{RAMP}) connected from this pin to V_{IN} sets the ramp amplitude and provides voltage feedforward functionality.

Absolute Maximum Ratings

Stresses exceeding the absolute maximum ratings may damage the device. The device may not function or be operable above the recommended operating conditions and stressing the parts to these levels is not recommended. In addition, extended exposure to stresses above the recommended operating conditions may affect device reliability. The absolute maximum ratings are stress ratings only.

Parameter	Conditions	Min.	Max.	Unit
VIN to PGND			28	V
VCC to AGND	AGND=PGND		6	V
BOOT to PGND			35	V
BOOT to SW		-0.5	6.0	V
SW to PGND	Continuous	-0.5	24.0	V
	Transient (t < 20ns, f ≤ 600KHz)	-5	30	V
All other pins		-0.3	V_{CC}+0.3	V
ESD	Human Body Model, JEDEC JESD22-A114	2.0		KV
	Charged Device Model, JEDEC JESD22-C101	2.5		

Recommended Operating Conditions

The Recommended Operating Conditions table defines the conditions for actual device operation. Recommended operating conditions are specified to ensure optimal performance to the datasheet specifications. Fairchild does not recommend exceeding them or designing to absolute maximum ratings.

Symbol	Parameter	Conditions	Min.	Typ.	Max.	Unit
V_{CC}	Bias Voltage	VCC to AGND	4.5	5.0	5.5	V
V_{IN}	Supply Voltage	VIN to PGND	3		24	V
T_A	Ambient Temperature	FAN2110MPX	-10		+85	°C
		FAN2110EMPX	-40		+85	°C
T_J	Junction Temperature				+125	°C
f_{SW}	Switching Frequency		200		600	kHz

Thermal Information

Symbol	Parameter		Min.	Typ.	Max.	Unit
T_{STG}	Storage Temperature		-65		+150	°C
T_L	Lead Soldering Temperature, 10 Seconds				+300	°C
θ_{JC}	Thermal Resistance: Junction-to-Case	P1 (Q2)		4		°C/W
		P2 (Q1)		7		°C/W
		P3		4		°C/W
$\theta_{J\text{-}PCB}$	Thermal Resistance: Junction-to-Mounting Surface(1)			35		°C/W
P_D	Power Dissipation, T_A=25°C(1)				2.8	W

Note:

1. Typical thermal resistance when mounted on a four-layer, two-ounce PCB, as shown in Figure 35. Actual results are dependent on mounting method and surface related to the design.

Electrical Specifications

Electrical specifications are the result of using the circuit shown in Figure 1 with V_{IN}=12V, unless otherwise noted.

Symbol	Parameter	Conditions	Min.	Typ.	Max.	Unit
Power Supplies						
I_{CC}	V_{CC} Current	SW=Open, V_{FB}=0.7V, V_{CC}=5V, f_{SW}=600KHz		8	12	mA
		Shutdown: EN=0, V_{CC}=5V		7	10	µA
V_{UVLO}	V_{CC} UVLO Threshold	Rising V_{CC}	4.1	4.3	4.5	V
		Hysteresis		300		mV
Oscillator						
f_{SW}	Frequency	R_T=50KΩ to GND	255	300	345	KHz
		R_T=24KΩ to GND	540	600	660	KHz
t_{ONmin}	Minimum On-Time(2)			50	65	ns
V_{RAMP}	Ramp Amplitude, Peak-to-Peak	16V_{IN}, 1.8V_{OUT}, R_T=30KΩ, R_{RAMP}=200KΩ		0.53		V
t_{OFFmin}	Minimum Off-Time(2)			100	150	ns
Reference						
V_{FB}	Reference Voltage *(see Figure 4 for Temperature Coefficient)*	FAN2110MPX, 25°C	794	800	806	mV
		FAN2110EMPX, 25°C	795	800	805	mV
Error Amplifier						
G	DC Gain(2)	V_{CC}=5V	80	85		dB
GBW	Gain Bandwidth Product(2)		12	15		MHz
V_{COMP}	Output Voltage(2)		0.4		3.2	V
I_{SINK}	Output Current, Sourcing	V_{CC}=5V, V_{COMP}=2.2V	1.5	2.2		mA
I_{SOURCE}	Output Current, Sinking	V_{CC}=5V, V_{COMP}=1.2V	0.8	1.2		mA
I_{BIAS}	FB Bias Current	V_{FB}=0.8V, 25°C	-850	-650	-450	nA
Protection and Shutdown						
I_{LIM}	Current Limit *(see Circuit Description)*(2)	R_{ILIM}=182 KΩ,, 25°C, f_{SW}=500KHz, V_{OUT}=1.5V, R_{RAMP}=243KΩ, 16 Consecutive Clock Cycles(3)	12	14	16	A
I_{ILIM}	I_{LIM} Current	V_{CC}=5V, 25°C	-11	-10	-9	µA
T_{TSD}	Over-Temperature Shutdown(2)	Internal IC Temperature		+155		°C
T_{HYS}	Over-Temperature Hysteresis(2)			+30		°C
V_{OVP}	Over-Voltage Threshold	2 Consecutive Clock Cycles(3)	110	115	121	%V_{OUT}
V_{UVSD}	Under-Voltage Shutdown	16 Consecutive Clock Cycles(3)	68	73	78	%V_{OUT}
V_{FLT}	Fault Discharge Threshold	Measured at FB Pin		250		mV
V_{FLT_HYS}	Fault Discharge Hysteresis	Measured at FB Pin (V_{FB} ~500mV)		250		mV
Soft-Start						
t_{SS}	V_{OUT} to Regulation (T0.8)	f_{SW}=500KHz		5.3		ms
t_{EN}	Fault Enable/SSOK (T1.0)(2)			6.7		ms

Continued on the following page…

Electrical Specifications (Continued)

Electrical specifications are the result of using the circuit shown in Figure 1 with V_{IN}=12V, unless otherwise noted.

Symbol	Parameter	Conditions	Min.	Typ.	Max.	Unit
Control Functions						
V_{EN}	EN Threshold, Rising	V_{CC}=5V		1.35	2.00	V
V_{EN_HYS}	EN Hysteresis	V_{CC}=5V		250		mV
R_{EN}	EN Pull-Up Resistance	V_{CC}=5V		800		KΩ
I_{EN_DISC}	EN Discharge Current	Auto-Restart Mode, V_{CC}=5V		1		µA
R_{FBok}	FB OK Drive Resistance				800	Ω
V_{PGTH_LO}	PGOOD LOW Threshold	FB < V_{REF}, 2 Consecutive Clock Cycles(3)	-14	-11	-8	%V_{REF}
V_{PGTH_UP}		FB > V_{REF}, 2 Consecutive Clock Cycles(3)	+7	+10	+13.5	
V_{PG_LO}	PGOOD Output Low	$I_{OUT} \leq$ 2mA			0.4	V
I_{PG_LK}	PGOOD Leakage Current	V_{PGOOD}=5V		0.2	1.0	µA

Notes:
2. Specifications guaranteed by design and characterization; not production tested.
3. Delay times are not tested in production. Guaranteed by design.

Typical Characteristics

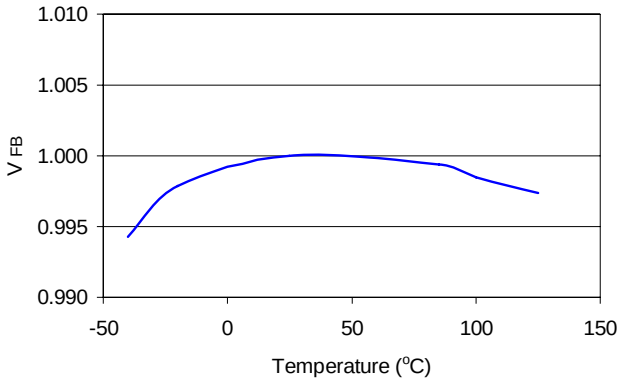

Figure 4. Reference Voltage (V_{FB}) vs. Temperature, Normalized

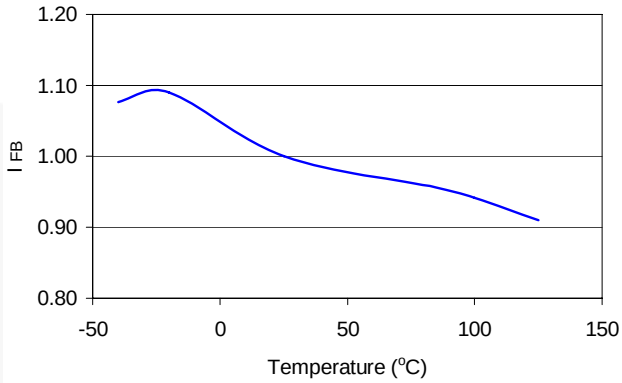

Figure 5. Reference Bias Current (I_{FB}) vs. Temperature, Normalized

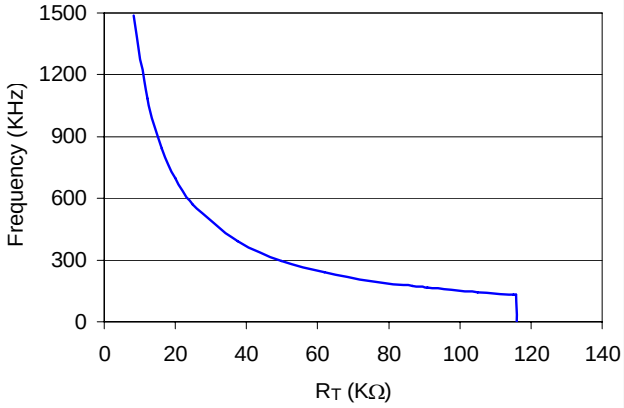

Figure 6. Frequency vs. R_T

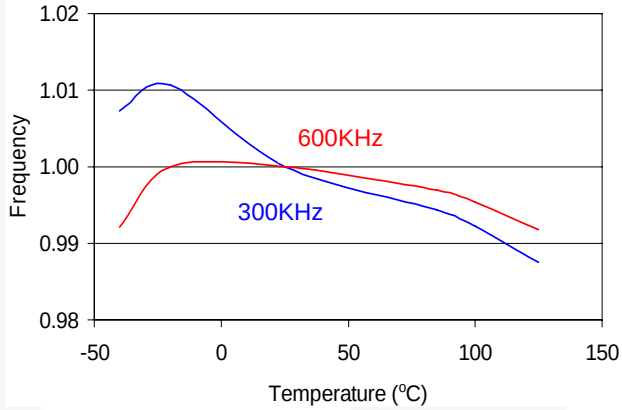

Figure 7. Frequency vs. Temperature, Normalized

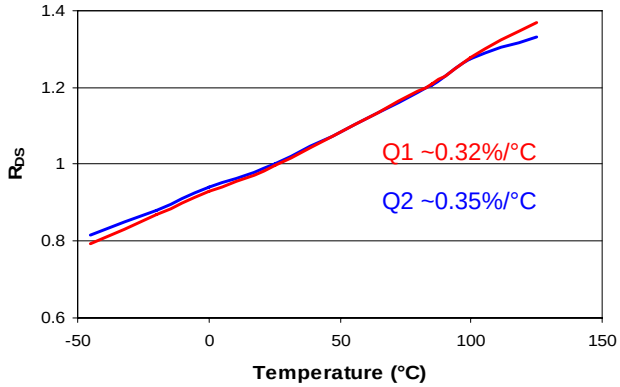

Figure 8. R_{DS} vs. Temperature, Normalized (V_{CC}=V_{GS}=5V), Figure 1

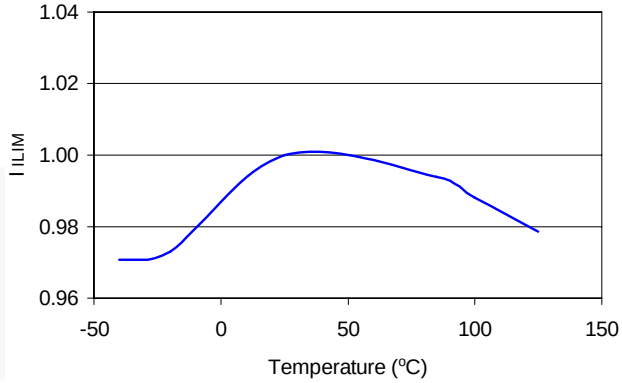

Figure 9. ILIM Current (I_{ILIM}) vs. Temperature, Normalized

Application Circuits

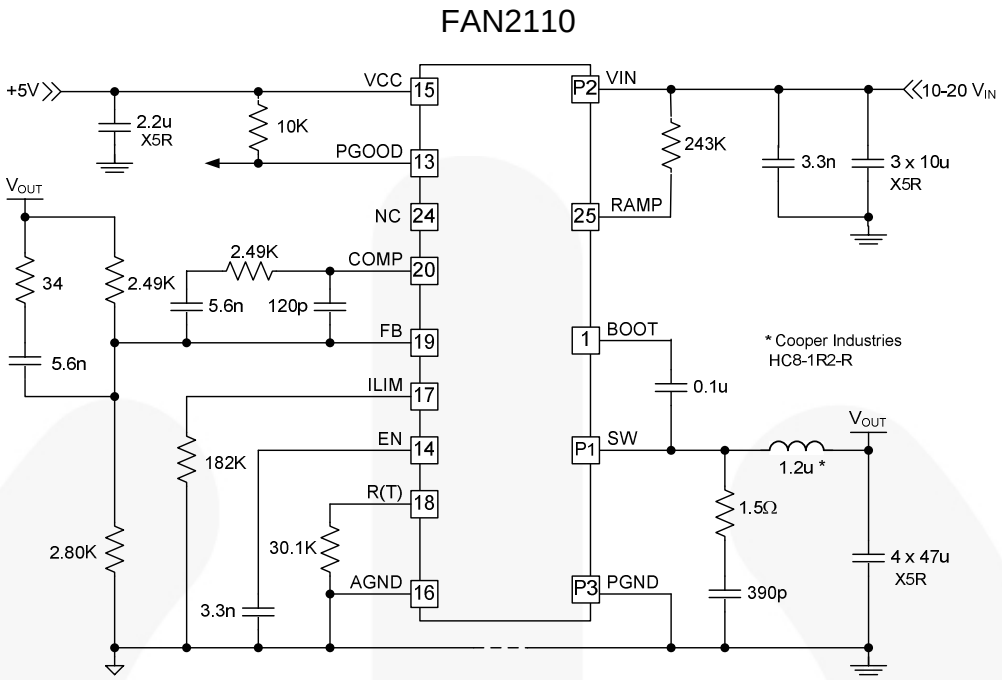

Figure 10. Application Circuit: 1.5V_{OUT}, 10A, 500KHz (10V-20V_{IN})

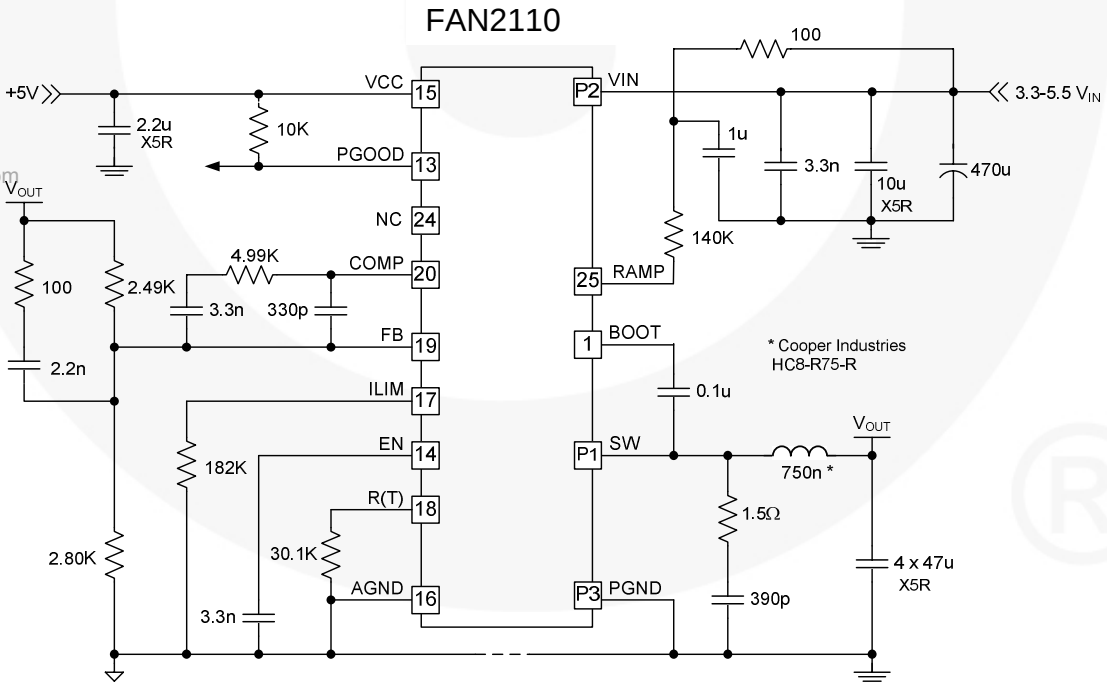

Figure 11. Application Circuit: 1.5V_{OUT}, 10A, 500KHz (3.3V-5.5V_{IN})

Typical Performance Characteristics

Typical operating characteristics using the circuit in Figure 10. V_{IN}=12V, V_{CC}=5V, T_A=25°C, unless otherwise specified.

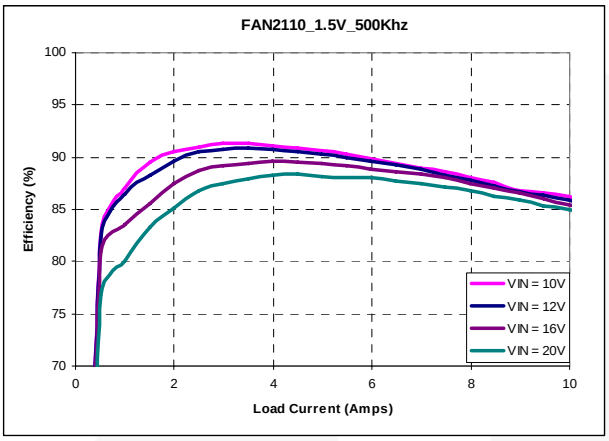

Figure 12. 1.5V_{OUT} Efficiency, 500KHz

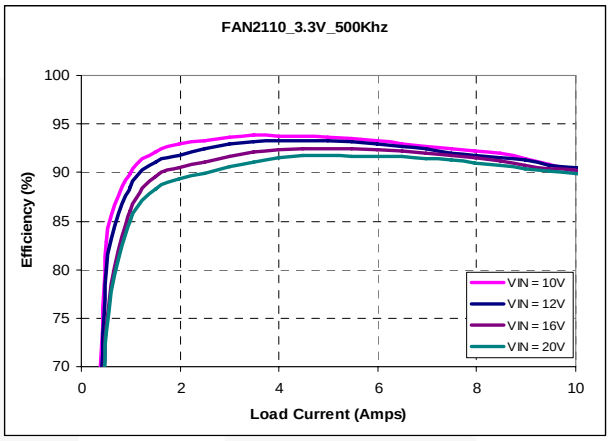

Figure 13. 3.3V_{OUT} Efficiency, 500KHz[4]

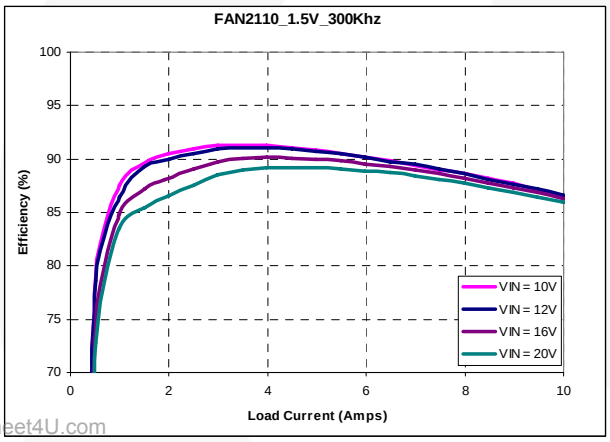

Figure 14. 1.5V_{OUT} Efficiency, 300KHz

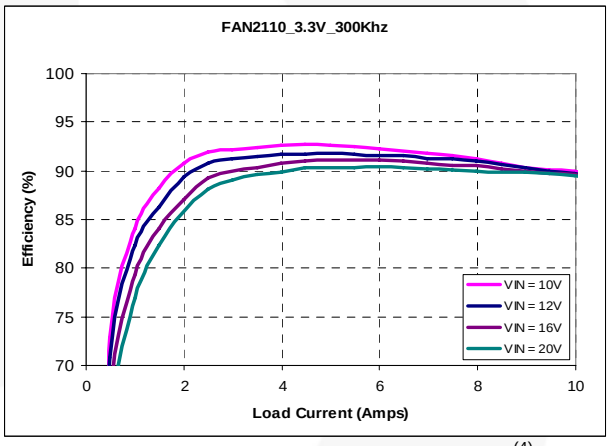

Figure 15. 3.3V_{OUT} Efficiency, 300KHz[4]

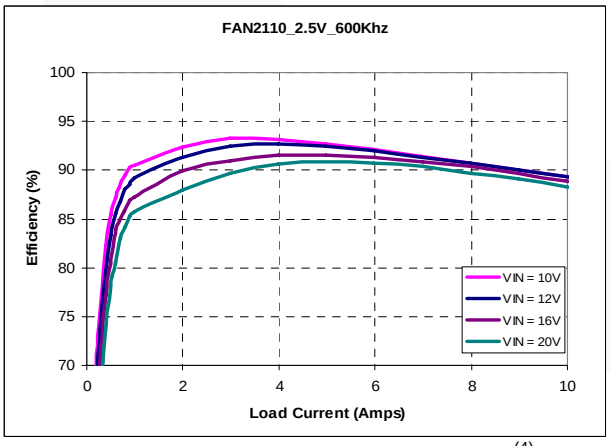

Figure 16. 2.5V_{OUT} Efficiency ,600KHz[4]

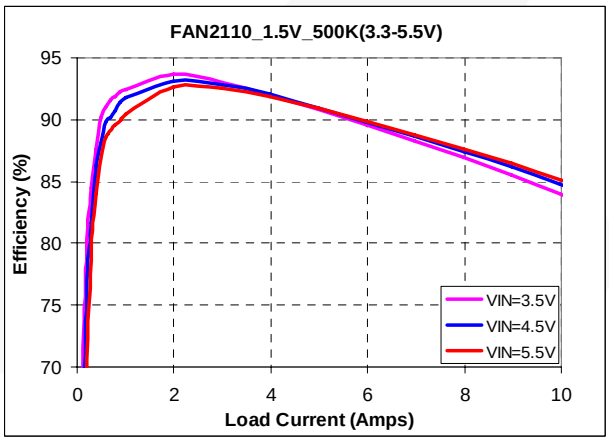

Figure 17. 1.5V_{OUT} Efficiency, 500KHz (V_{IN}=3.3V to 5V), Figure 11

Note:

4. Circuit values for this configuration change in Figure 10.

Typical Performance Characteristics (Continued)

Typical operating characteristics using the circuit in Figure 10. V_{IN}=12V, V_{CC}=5V, T_A=25°C unless otherwise specified.

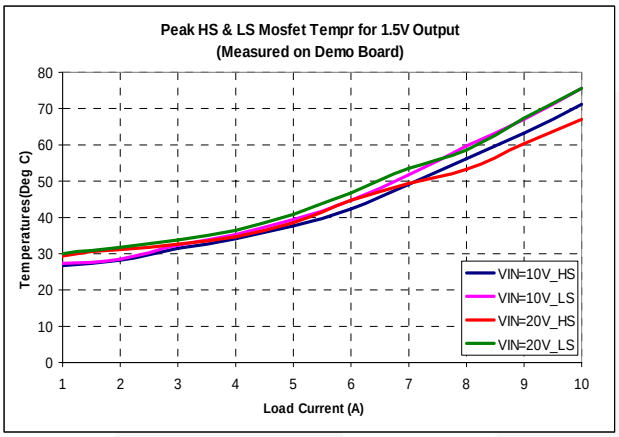

Figure 18. Peak MOSFET Temperatures, Figure 10

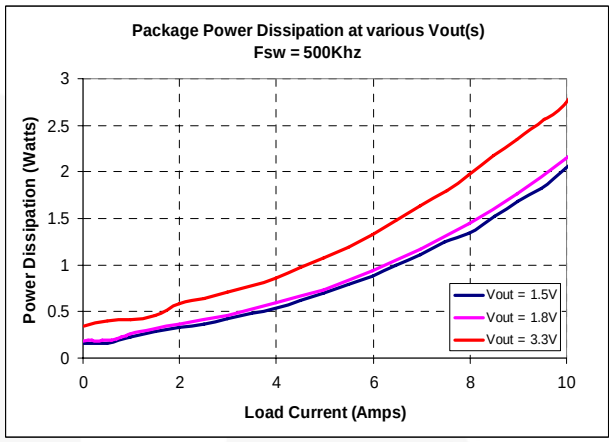

Figure 19. Device Dissipation Over V_{OUT} vs. Load

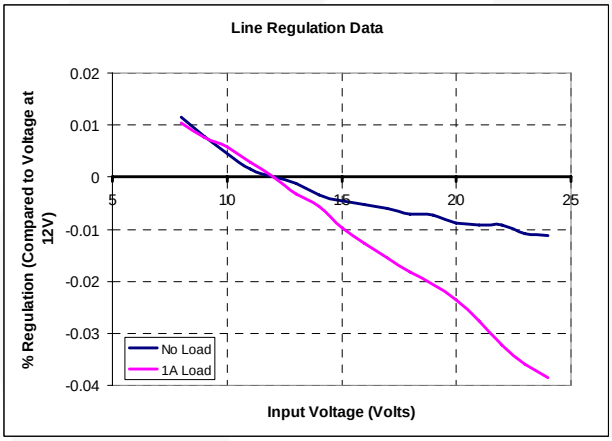

Figure 20. 1.5V_{OUT} Line Regulation

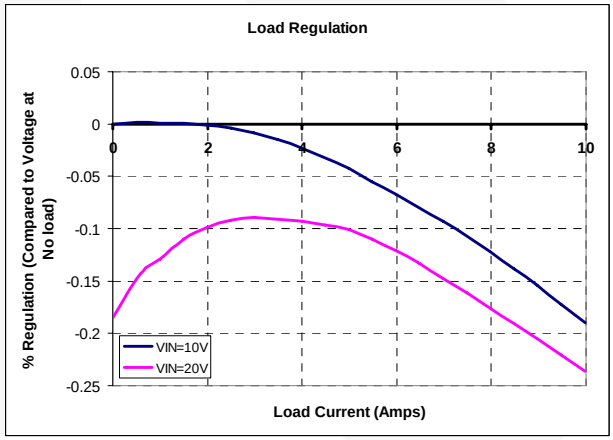

Figure 21. 1.5V_{OUT} Load Regulation

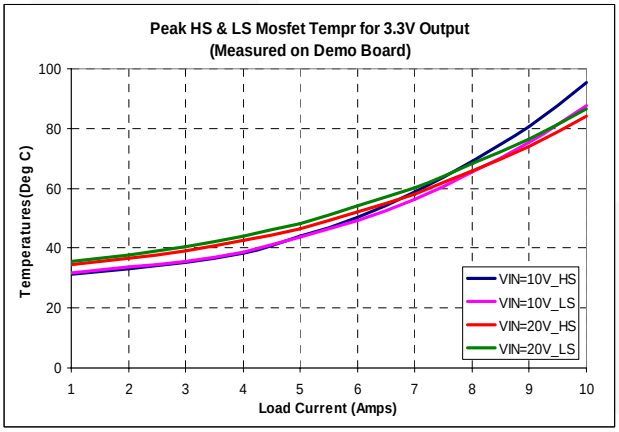

Figure 22. Peak MOSFET Temperatures, 3.3V Output[5]

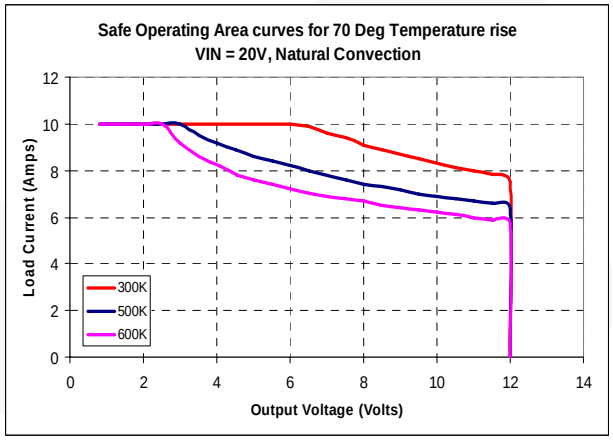

Figure 23. Typical 20V_{IN} Safe Operation Area (SOA), 70°C Ambient Temperature, Natural Convection

Note:

5. Circuit values for this configuration change in Figure 10.

Typical Performance Characteristics (Continued)

Typical operating characteristics using the circuit in Figure 10. V_{IN}=12V, V_{CC}=5V, T_A=25°C unless otherwise specified.

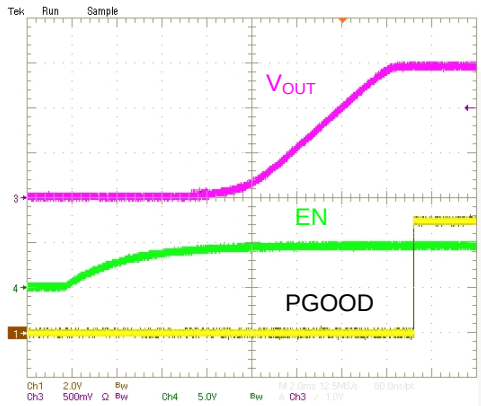

Figure 24. Startup, 10A Load

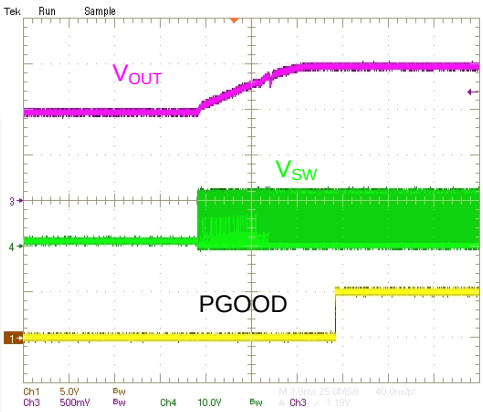

Figure 25. Startup with 1.0V Pre-Bias on V_{OUT}

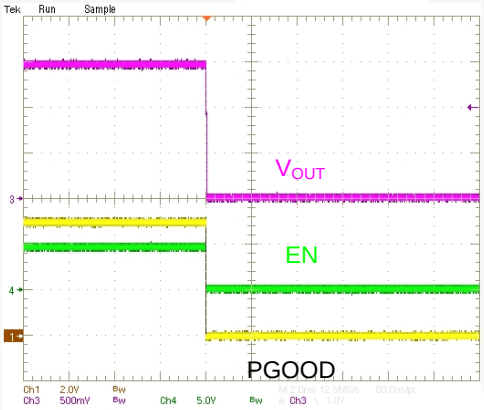

Figure 26. Shutdown, 10A Resistive Load

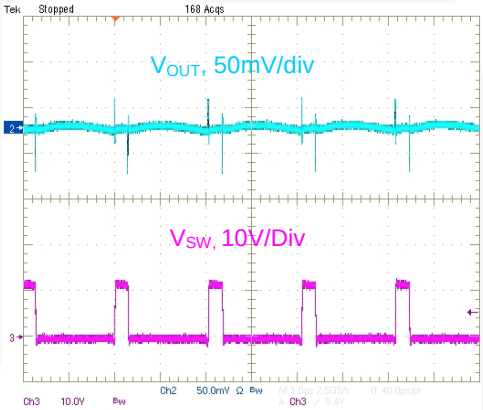

Figure 27. V_{OUT} Ripple and SW Voltage, 10A Load

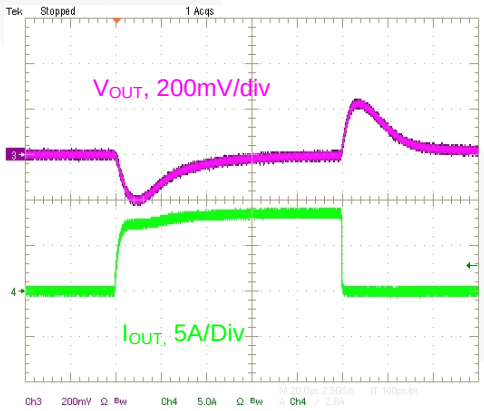

Figure 28. Transient Response, 0-8A Load, 5A / µs Slew Rate

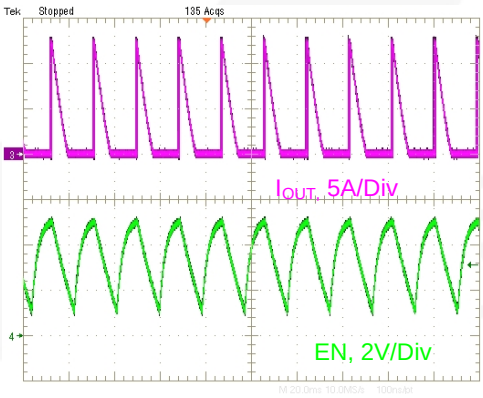

Figure 29. Restart on Short Circuit (Fault)

Circuit Description

PWM Generation

Refer to Figure 2 for the PWM control mechanism. FAN2110 uses the summing-mode method of control to generate the PWM pulses. An amplified current-sense signal is summed with an internally generated ramp and the combined signal is compared with the output of the error amplifier to generate the pulse width to drive the high-side MOSFET. Sensed current from the previous cycle is used to modulate the output of the summing block. The output of the summing block is also compared against a voltage threshold set by the R_{LIM} resistor to limit the inductor current on a cycle-by-cycle basis. R_{RAMP} resistor helps set the charging current for the internal ramp and provides input voltage feed-forward function. The controller facilitates external compensation for enhanced flexibility.

Initialization

Once V_{CC} exceeds the UVLO threshold and EN is HIGH, the IC checks for a shorted FB pin before releasing the internal soft-start ramp (SS).

If the parallel combination of R1 and R_{BIAS} is ≤ 1KΩ, the internal SS ramp is not released and the regulator does not start.

Enable

FAN2110 has an internal pull-up to the enable (EN) pin so that the IC is enabled once V_{CC} exceeds the UVLO threshold. Connecting a small capacitor across EN and AGND delays the rate of voltage rise on the EN pin. The EN pin also serves for the restart whenever a fault occurs *(refer to the Auto-Restart section)*. If the regulator is enabled externally, the external EN signal should go HIGH only after V_{CC} is established. For applications where such sequencing is required, FAN2110 can be enabled (after the V_{CC} comes up) with external control, as shown in Figure 30.

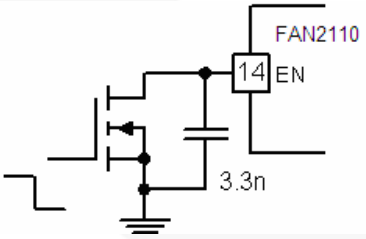

Figure 30. Enabling with External Control

Soft-Start

Once internal SS ramp has charged to 0.8V (T0.8), the output voltage is in regulation. Until SS ramp reaches 1.0V (T1.0), the fault latch is inhibited.

To avoid skipping the soft-start cycle, it is necessary to apply V_{IN} before V_{CC} reaches its UVLO threshold. Normal sequence for powering up would be VIN→VCC→EN.

Soft-start time is a function of oscillator frequency.

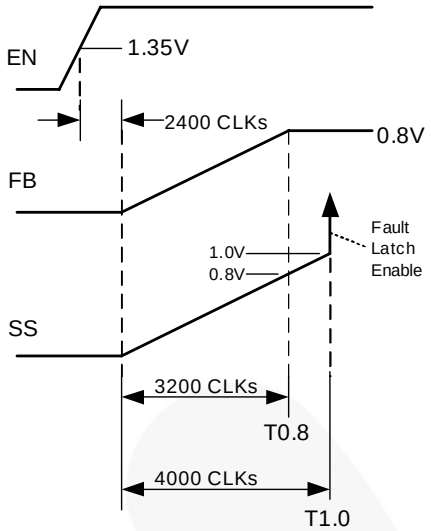

Figure 31. Soft-Start Timing Diagram

V_{CC} UVLO or toggling the EN pin discharges the internal SS and resets the IC. In applications where external EN signal is used, V_{IN} and V_{CC} should be established before the EN signal comes up to prevent skipping the soft-start function.

Startup on Pre-Bias

The regulator does not allow the low-side MOSFET to operate in full synchronous mode until SS reaches 95% of V_{REF} (~0.76V). This enables the regulator to startup on a pre-biased output and ensures that pre-biased outputs are not discharged during the soft-start cycle.

Protections

The converter output is monitored and protected against extreme overload, short-circuit, over-voltage, under-voltage, and over-temperature conditions.

Under-Voltage Shutdown

If voltage on the FB pin remains below the under-voltage threshold for 16 consecutive clock cycles, the fault latch is set and the converter shuts down. This protection is not active until the internal SS ramp reaches 1.0V during soft-start.

Over-Voltage Protection

If voltage on the FB pin exceeds 115% of V_{REF} for two consecutive clock cycles, the fault latch is set and shutdown occurs.

A shorted high-side MOSFET condition is detected when SW voltage exceeds ~0.7V while the low-side MOSFET is fully enhanced. The fault latch is set immediately upon detection.

The OV/UV fault protection circuits above are active all the time, including during soft-start.

Over-Temperature Protection (OTP)

The chip incorporates an over-temperature protection circuit that sets the fault latch when a die temperature of about 150°C is reached. The IC restarts when the die temperature falls below 125°C.

Auto-Restart

After a fault, EN pin is discharged by a 1µA current sink to a 1.1V threshold before the internal 800KΩ pull-up is restored. A new soft-start cycle begins when EN charges above 1.35V.

Depending on the external circuit, the FAN2110 can be configured to remain latched-off or to automatically restart after a fault.

Table 1. Fault / Restart Configurations

EN Pin	Controller / Restart State
Pull to GND	OFF (Disabled)
Pull-up to V_{CC} with 100K	No Restart – Latched OFF (After V_{CC} Comes Up)
Open	Immediate Restart After Fault
Cap. to GND	New Soft-Start Cycle After: t_{DELAY} (ms)=3.9 • C(nf)

When EN is left open, restart is immediate.

If auto-restart is not desired, tie the EN pin to the VCC pin or pull it HIGH after V_{CC} comes up with a logic gate to keep the 1µA current sink from discharging EN to 1.1V. Figure 32 shows one method to pull up EN to V_{CC} for a latch configuration.

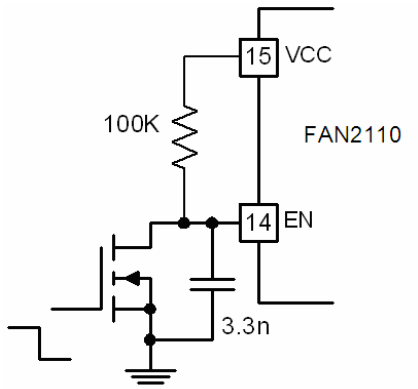

Figure 32. Enable Control with Latch Option

Power-Good (PGOOD) Signal

PGOOD is an open-drain output that asserts LOW when V_{OUT} is out of regulation, as measured at the FB pin. Thresholds are specified in the Electrical Specifications section. PGOOD does not assert HIGH until the fault latch is enabled (T1.0) *(see Figure 31)*.

Application Information

Bias Supply

The FAN2110 requires a 5V supply rail to bias the IC and provide gate-drive energy. Connect a ≥ 2.2µf X5R or X7R decoupling capacitor between VCC and AGND.

Since V_{CC} is used to drive the internal MOSFET gates, supply current is frequency and voltage dependent. Approximate V_{CC} current (I_{CC}) is calculated by:

$$I_{CC(mA)} = 4.58 + [(\frac{V_{CC} - 5}{227} + 0.013) \bullet (f - 128)] \quad (1)$$

where frequency (f) is expressed in KHz.

Setting the Output Voltage

The output voltage of the regulator can be set from 0.8V to 80% of V_{IN} by an external resistor divider (R1 and R_{BIAS} in Figure 1). For output voltages >3.3V, output current rating may need to be de-rated depending on the ambient temperature, power dissipated in the package and the PCB layout. *(Refer to Thermal Information table on page 4, Figure 22, and Figure 23.)*

The external resistor divider is calculated using:

$$\frac{0.8V}{R_{BIAS}} = \frac{V_{OUT} - 0.8V}{R1} + 650nA \quad (2)$$

Connect R_{BIAS} between FB and AGND.

If R1 is open *(see Figure 1),* the output voltage is not regulated and a latched fault occurs after the SS is complete (T1.0).

If the parallel combination of R1 and R_{BIAS} is ≤ 1KΩ, the internal SS ramp is not released and the regulator does not start.

Setting the Clock Frequency

Oscillator frequency is determined by an external resistor, R_T, connected between the R_T pin and AGND. Resistance is calculated by:

$$R_{T(K\Omega)} = \frac{(10^6 / f) - 135}{65} \quad (3)$$

where R_T is in KΩ and frequency (f) is in KHz.

The regulator cannot start if R_T is left open.

Calculating the Inductor Value

Typically the inductor value is chosen based on ripple current (ΔI_L), which is chosen between 10 to 35% of the maximum DC load. Regulator designs that require fast transient response use a higher ripple-current setting, while regulator designs that require higher efficiency keep ripple current on the low side and operate at a lower switching frequency. The inductor value is calculated by the following formula:

$$L = \frac{V_{OUT} \bullet (1 - \frac{V_{OUT}}{Vin})}{\Delta IL \bullet f} \quad (4)$$

where f is the oscillator frequency.

Setting the Ramp Resistor Value

R_{RAMP} resistor plays a critical role in the design by providing charging current to the internal ramp capacitor and also serving as a means to provide input voltage feedforward.

R_{RAMP} is calculated by the following formula:

$$R_{RAMP(K\Omega)} = \frac{(V_{IN} - 1.8) \bullet V_{OUT}}{(31 - 2.05 \bullet I_{OUT}) \bullet V_{IN} \bullet f \bullet 10^{-6}} - 2 \quad (5)$$

where frequency (f) is expressed in KHz.

For wide input operation, first calculate R_{RAMP} for the minimum and maximum input voltage conditions and use larger of the two values calculated.

In all applications, current through the R_{RAMP} pin must be greater than 10µA from the equation below for proper operation:

$$\frac{V_{IN} - 1.8}{R_{RAMP} + 2} \geq 10\mu A \quad (6)$$

If the calculated R_{RAMP} values in Equation (5) result in a current less than 10µA, use the R_{RAMP} value that satisfies Equation (6). In applications with large Input ripple voltage, the R_{RAMP} resistor should be adequately decoupled from the input voltage to minimize ripple on the ramp pin. For example, see Figure 11.

Setting the Current Limit

There are two levels of current-limit thresholds. The first level of protection is through an internal default limit set at the factory to limit output current beyond normal usage levels. The second level of protection is set externally at the ILIM pin by connecting a resistor (R_{ILIM}) between ILIM and AGND. Current-limit protection is enabled whenever the lower of the two thresholds is reached (*see Figure 33*). FAN2110 uses its internal low-side MOSFET for current-sensing. The current-limit threshold voltage (V_{ILIM}) is compared to a scaled version of voltage drop across the low-side MOSFET sampled at the end of each PWM off-time/cycle. The internal default threshold (with I_{LIM} open) is temperature compensated.

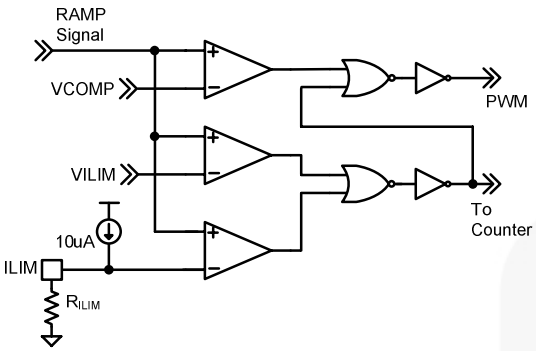

Figure 33.ILIM Network

The ILIM pin can source a 10µA current that can be used to establish a lower, temperature–dependent, current-limit threshold by connecting an external resistor (R_{ILIM}) to AGND. R_{ILIM} can be approximated with the equation:

$$R_{ILIM}(K\Omega) = 95 + 6.1 \bullet I_{OUT} + \frac{(V_{IN} - 1.8) \bullet V_{OUT} \bullet 3.33 \bullet 10^6}{(R_{RAMP} + 2) \bullet V_{IN} \bullet f} \quad (7)$$

where:

I_{OUT} = Full load current in Amps;
V_{OUT} = Set output voltage;
V_{IN} = Input voltage;
R_{RAMP} = Ramp resistor used in KΩ; and
f = Selected switching frequency in KHz.

After 16 consecutive, pulse-by-pulse, current-limit cycles, the fault latch is set and the regulator shuts down. Cycling V_{CC} or EN restores operation after a normal soft-start cycle *(refer to Auto-Restart section)*.

The over-current protection fault latch is active during the soft-start cycle. Use a 1% resistor for R_{ILIM}.

Always use an external resistor R_{ILIM} to set the current limit at the desired level. When R_{ILIM} is not connected, the IC's internal default current limit is fairly high. This could lead to operation at high load currents, causing overheating of the regulator. For a given R_{ILIM} and R_{RAMP} setting, the current limit point varies slightly in an inverse relationship with respect to input voltage (V_{IN}).

Loop Compensation

The loop is compensated using a feedback network around the error amplifier. Figure 34 shows a complete type-3 compensation network. For type-2 compensation, eliminate R3 and C3.

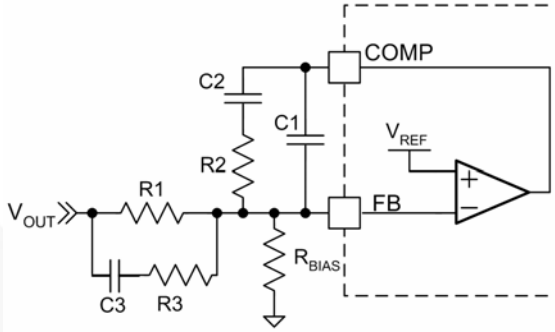

Figure 34. Compensation Network

Since the FAN2110 employs summing current-mode architecture, type-2 compensation can be used for many applications. For applications that require wide loop bandwidth and/or use very low-ESR output capacitors, type-3 compensation may be required.

R_{RAMP} also provides feedforward compensation for changes in V_{IN}. With a fixed R_{RAMP} value, the modulator gain increases as V_{IN} is reduced, which could make it difficult to compensate the loop. For low-input-voltage-range designs (3V to 8V), R_{RAMP} and the compensation component values will be different compared to designs with V_{IN} between 8V and 24V.

Recommended PCB Layout

Good PCB layout and careful attention to temperature rise is essential for reliable operation of the regulator. Four-layer PCB with two-ounce copper on the top and bottom side and thermal vias connecting the layers is recommended. Keep power traces wide and short to minimize losses and ringing. Do not connect AGND to PGND below the IC. Connect the AGND pin to PGND at the output OR to the PGND plane.

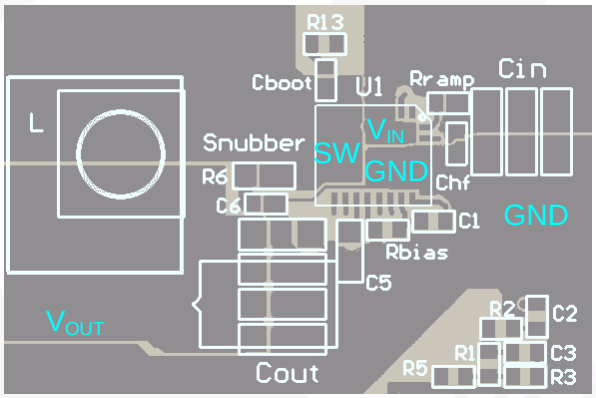

Figure 35. Recommended PCB Layout

Physical Dimensions

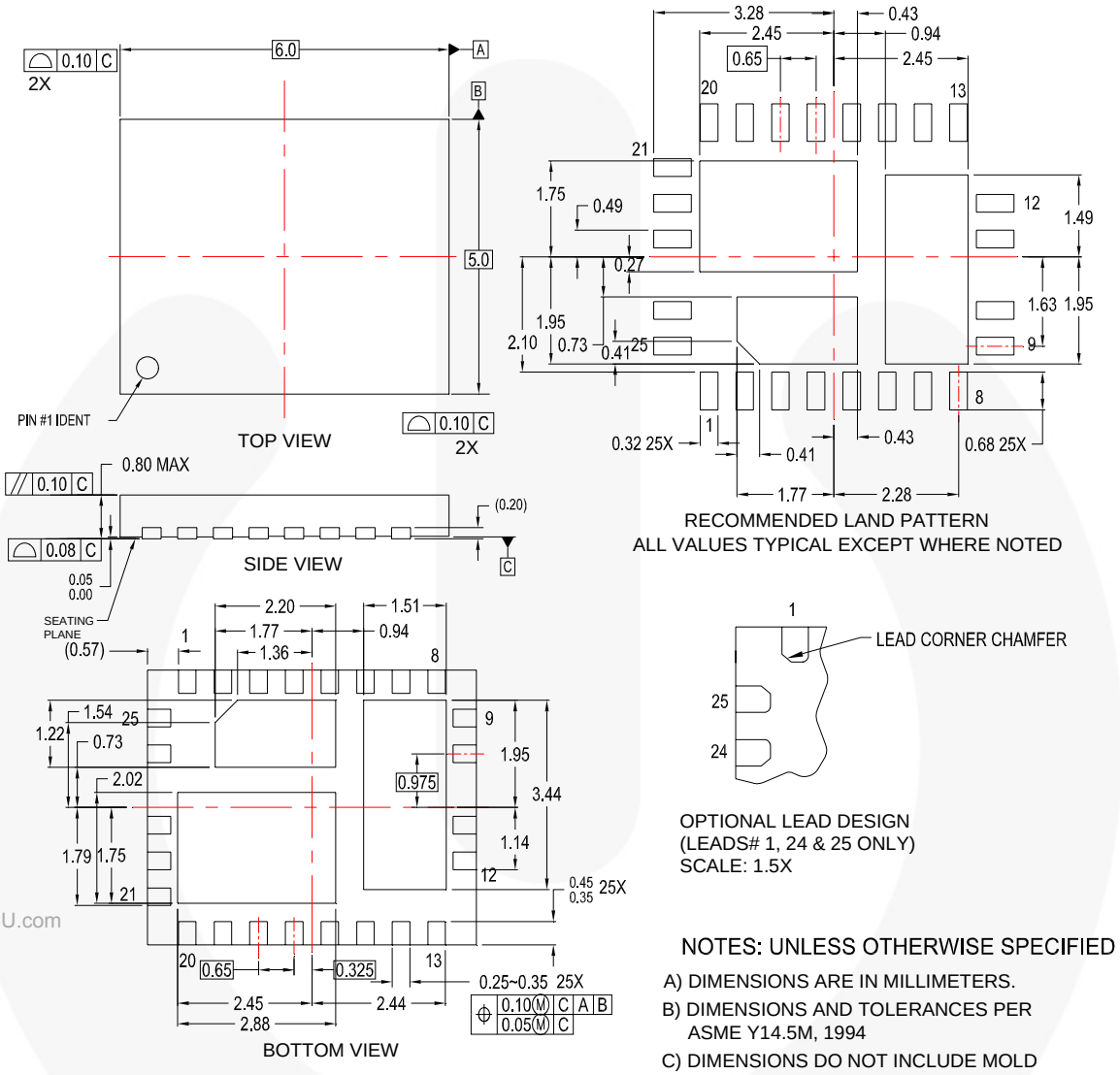

NOTES: UNLESS OTHERWISE SPECIFIED

A) DIMENSIONS ARE IN MILLIMETERS.

B) DIMENSIONS AND TOLERANCES PER ASME Y14.5M, 1994

C) DIMENSIONS DO NOT INCLUDE MOLD FLASH OR BURRS.

D) DESIGN BASED ON JEDEC MO-220 VARIATION WJHC

E) TERMINALS ARE SYMMETRICAL AROUND THE X & Y AXIS EXCEPT WHERE DEPOPULATED.

F) DRAWING FILENAME: MKT-MLP25AREV3

Figure 36. 5x6mm Molded Leadless Package (MLP)

Package drawings are provided as a service to customers considering Fairchild components. Drawings may change in any manner without notice. Please note the revision and/or date on the drawing and contact a Fairchild Semiconductor representative to verify or obtain the most recent revision. Package specifications do not expand the terms of Fairchild's worldwide terms and conditions, specifically the warranty therein, which covers Fairchild products.

Always visit Fairchild Semiconductor's online packaging area for the most recent package drawings: http://www.fairchildsemi.com/packaging/.

FAIRCHILD SEMICONDUCTOR®

TRADEMARKS

The following includes registered and unregistered trademarks and service marks, owned by Fairchild Semiconductor and/or its global subsidiaries, and is not intended to be an exhaustive list of all such trademarks.

AccuPower™
Auto-SPM™
Build it Now™
CorePLUS™
CorePOWER™
CROSSVOLT™
CTL™
Current Transfer Logic™
EcoSPARK®
EfficientMax™
EZSWITCH™*
E²™*
F®
Fairchild®
Fairchild Semiconductor®
FACT Quiet Series™
FACT®
FAST®
FastvCore™
FETBench™
FlashWriter®*
FPS™
F-PFS™
FRFET®
Global Power Resource℠
Green FPS™
Green FPS™ e-Series™
Gmax™
GTO™
IntelliMAX™
ISOPLANAR™
MegaBuck™
MICROCOUPLER™
MicroFET™
MicroPak™
MillerDrive™
MotionMax™
Motion-SPM™
OPTOLOGIC®
OPTOPLANAR®
®
PDP SPM™
Power-SPM™
PowerTrench®
PowerXS™
Programmable Active Droop™
QFET®
QS™
Quiet Series™
RapidConfigure™
™
Saving our world, 1mW/W/kW at a time™
SignalWise™
SmartMax™
SMART START™
SPM®
STEALTH™
SuperFET™
SuperSOT™-3
SuperSOT™-6
SuperSOT™-8
SupreMOS™
SyncFET™
Sync-Lock™
SYSTEM GENERAL ®*
The Power Franchise®
the power franchise
TinyBoost™
TinyBuck™
TinyCalc™
TinyLogic®
TINYOPTO™
TinyPower™
TinyPWM™
TinyWire™
TriFault Detect™
TRUECURRENT™*
µSerDes™
µSerDes™
UHC®
Ultra FRFET™
UniFET™
VCX™
VisualMax™
XS™

* Trademarks of System General Corporation, used under license by Fairchild Semiconductor.

DISCLAIMER

FAIRCHILD SEMICONDUCTOR RESERVES THE RIGHT TO MAKE CHANGES WITHOUT FURTHER NOTICE TO ANY PRODUCTS HEREIN TO IMPROVE RELIABILITY, FUNCTION, OR DESIGN. FAIRCHILD DOES NOT ASSUME ANY LIABILITY ARISING OUT OF THE APPLICATION OR USE OF ANY PRODUCT OR CIRCUIT DESCRIBED HEREIN; NEITHER DOES IT CONVEY ANY LICENSE UNDER ITS PATENT RIGHTS, NOR THE RIGHTS OF OTHERS. THESE SPECIFICATIONS DO NOT EXPAND THE TERMS OF FAIRCHILD'S WORLDWIDE TERMS AND CONDITIONS, SPECIFICALLY THE WARRANTY THEREIN, WHICH COVERS THESE PRODUCTS.

LIFE SUPPORT POLICY

FAIRCHILD'S PRODUCTS ARE NOT AUTHORIZED FOR USE AS CRITICAL COMPONENTS IN LIFE SUPPORT DEVICES OR SYSTEMS WITHOUT THE EXPRESS WRITTEN APPROVAL OF FAIRCHILD SEMICONDUCTOR CORPORATION.

As used herein:

1. Life support devices or systems are devices or systems which, (a) are intended for surgical implant into the body or (b) support or sustain life, and (c) whose failure to perform when properly used in accordance with instructions for use provided in the labeling, can be reasonably expected to result in a significant injury of the user.
2. A critical component in any component of a life support, device, or system whose failure to perform can be reasonably expected to cause the failure of the life support device or system, or to affect its safety or effectiveness.

ANTI-COUNTERFEITING POLICY

Fairchild Semiconductor Corporation's Anti-Counterfeiting Policy. Fairchild's Anti-Counterfeiting Policy is also stated on our external website, www.fairchildsemi.com, under Sales Support.

Counterfeiting of semiconductor parts is a growing problem in the industry. All manufacturers of semiconductor products are experiencing counterfeiting of their parts. Customers who inadvertently purchase counterfeit parts experience many problems such as loss of brand reputation, substandard performance, failed applications, and increased cost of production and manufacturing delays. Fairchild is taking strong measures to protect ourselves and our customers from the proliferation of counterfeit parts. Fairchild strongly encourages customers to purchase Fairchild parts either directly from Fairchild or from Authorized Fairchild Distributors who are listed by country on our web page cited above. Products customers buy either from Fairchild directly or from Authorized Fairchild Distributors are genuine parts, have full traceability, meet Fairchild's quality standards for handling and storage and provide access to Fairchild's full range of up-to-date technical and product information. Fairchild and our Authorized Distributors will stand behind all warranties and will appropriately address any warranty issues that may arise. Fairchild will not provide any warranty coverage or other assistance for parts bought from Unauthorized Sources. Fairchild is committed to combat this global problem and encourage our customers to do their part in stopping this practice by buying direct or from authorized distributors.

PRODUCT STATUS DEFINITIONS

Definition of Terms

Datasheet Identification	Product Status	Definition
Advance Information	Formative / In Design	Datasheet contains the design specifications for product development. Specifications may change in any manner without notice.
Preliminary	First Production	Datasheet contains preliminary data; supplementary data will be published at a later date. Fairchild Semiconductor reserves the right to make changes at any time without notice to improve design.
No Identification Needed	Full Production	Datasheet contains final specifications. Fairchild Semiconductor reserves the right to make changes at any time without notice to improve the design.
Obsolete	Not In Production	Datasheet contains specifications on a product that is discontinued by Fairchild Semiconductor. The datasheet is for reference information only.

Rev. I42